Telescopic slides, steel for side mounting, full extension, load capacity up to 30 kg

Item description/product images

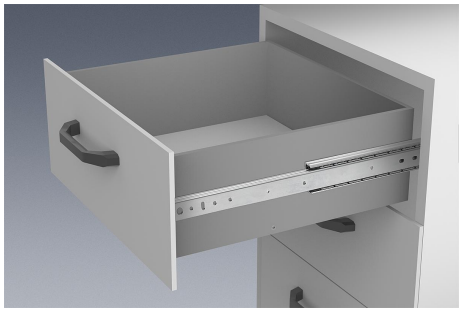

Description

Material:
Slides steel.
Ball cages steel and plastic.
Balls C-steel.

Version:
Slides electro zinc-plated and trivalent blue passivated.
Balls hardened.

Note for ordering:
Supplied in pairs

Note:
On telescopic slides with full extension, the travel is equal to the installed length, which ensures greater comfort and accessibility. Interlocking in closed position. When the release lever is actuated, the drawer can be taken out easily and separated from the guide.
The dynamic load capacity of the telescopic slides indicates the maximum load rating of a vertically mounted slide pair when the entire extension length is used. The specified load capacities refer to the maximum value for 20,000 cycles.

Note:
The load capacity of all telescopic slides is tested to DIN EN 15338 Level 1.

Drawings

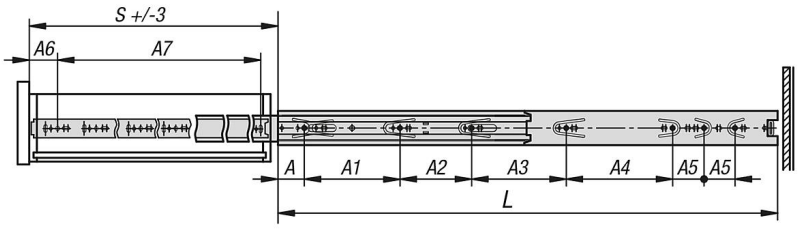

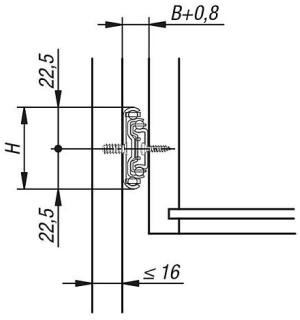

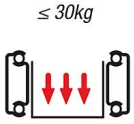

Overview of items

Steel telescopic slides for side mounting, full extension, load capacity up to 30 kg

© HEINRICH KIPP WERK KG

Telescopic slides, steel for side mounting, full extension, load capacity up to 30 kg

Overview of items

Order No.	A	A1	A2	A3	A4	A5	A6	A7	B	H	L	Travel S	Loading per pair kg
K1569.0250	35	128	-	-	-	-	35	192	12,7	45	250	250	30
K1569.0300	35	128	96	-	-	-	35	242	12,7	45	300	300	30
K1569.0350	35	128	96	-	-	-	35	292	12,7	45	350	350	30
K1569.0400	35	128	96	96	-	-	35	342	12,7	45	400	400	30
K1569.0450	35	128	96	128	-	-	35	392	12,7	45	450	450	30
K1569.0500	35	128	96	128	64	-	35	442	12,7	45	500	500	30
K1569.0550	35	128	96	128	64	32	35	492	12,7	45	550	550	30

© HEINRICH KIPP WERK KG