Latches adjustable

Item description/product images

Description

Material:
Steel or stainless steel 1.4301.

Version:
Steel trivalent blue passivated
Stainless steel bright.

Note:
Adjustable latches are secure locking systems for industrial applications. By exceeding the dead center they resist vibration.

After the bail engages with the catch plate, the parts to be locked can be drawn together by up to 15 mm by pushing the lever down. To compensate for tolerances or to create enough tension the bail length can be adjusted using the M8 spindle.

The latches can be screwed down or riveted. We recommend using countersunk screws for fastening the components.

Order the required catch plate version separately.

The retaining force F1 applies to the latch, not the catch plate.

On request:
Lockable version with padlock bracket.

© HEINRICH KIPP WERK KG

Latches adjustable

Drawings

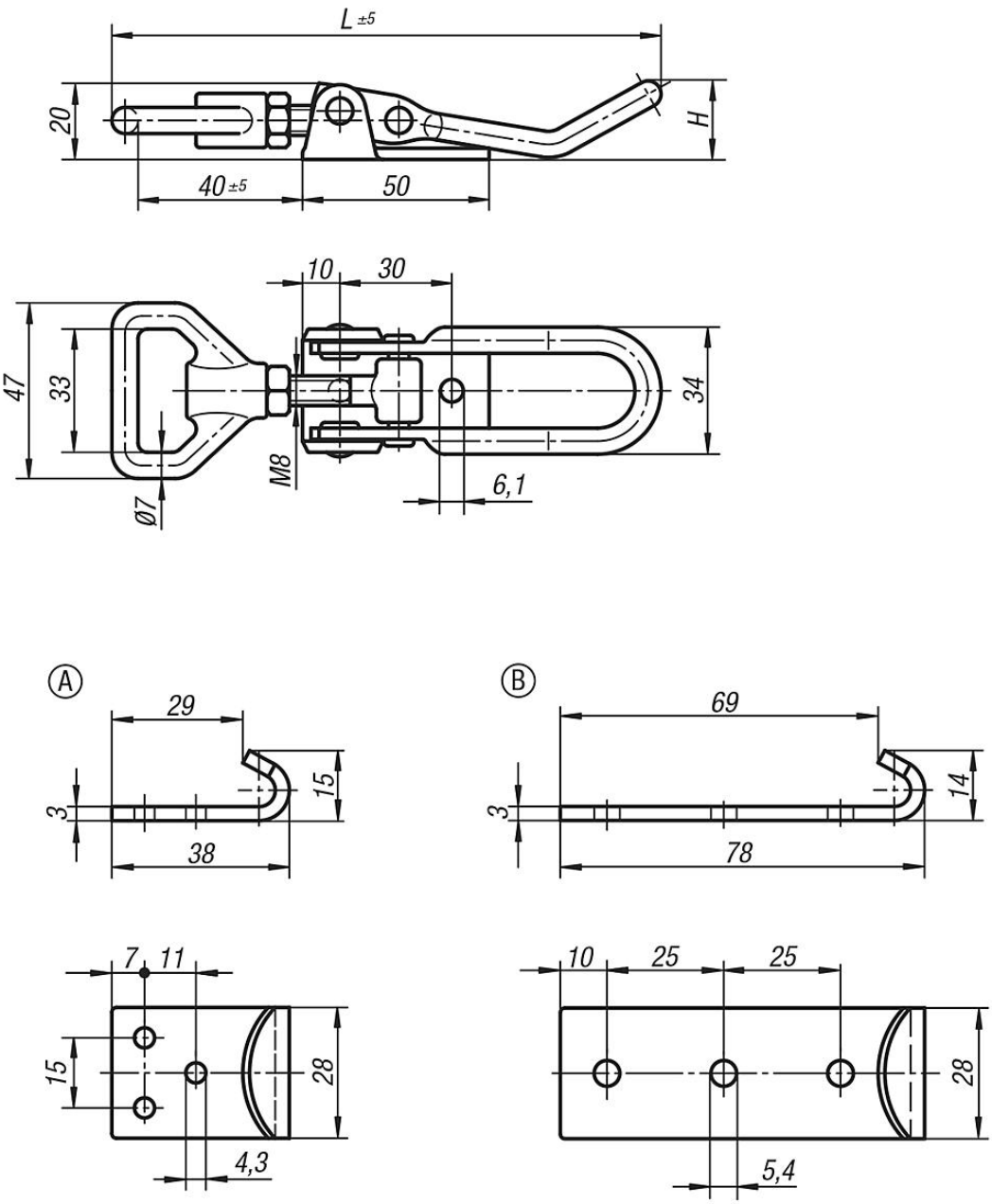

Overview of items

Latches adjustable

Order No.	Main material	Form	H	L	Retaining force F1 N
K0051.1611451	steel	A	21	145	6500
K0051.1611452	stainless steel	A	21	145	6500
K0051.1611681	steel	A	36	168	6500
K0051.1611682	stainless steel	A	36	168	6500
K0051.9143381	steel	A	-	38	-
K0051.9143382	stainless steel	A	-	38	-
K0051.9254781	steel	B	-	78	-
K0051.9254782	stainless steel	B	-	38	-

© HEINRICH KIPP WERK KG