Clamping joints

Item description/product images

Description

Material:
Sleeve and pin steel.
Clamp block high-strength aluminium.
Wing grip black grey thermoplastic.

Version:
Sleeve and pin high-gloss chromed.
Clamp block black anodised.

Note:
Infinitely adjustable.
Wing grip for rapid clamping.

On request:
Different combinations diameters D and D1.

Drawings

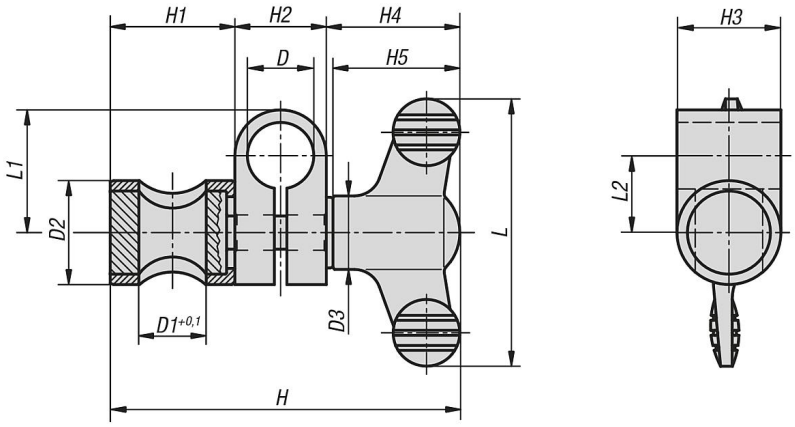

Overview of items

Clamping joints

Order No.	Size	D	D1	D2	D3	H	H1	H2	H3	H4	H5	L	L1	L2
K0136.0606	1	6	6	14	12	43,6	15	9	14	19,6	18	38	13	8,5
K0136.0808	2	8	8	16	14	54,6	17	12	16	25,6	24	50	18	12
K0136.1010	3	10	10	18	14	60,6	20	15	18	25,6	24	50	22	14,5
K0136.1212	4	12	12	20	21	77,2	23	17	20	37,2	35,6	75	24	15,5
K0136.1616	5	16	16	25	21	90,2	31	22	25	37,2	35,6	75	29,5	18,5
K0136.2020	6	20	20	30	21	98,2	36	25	30	37,2	35,6	75	30	17,5

© HEINRICH KIPP WERK KG