Crank handles with safety grip

Item description/product images

Description

Material:
Arm and grip black grey thermoplastic.

Version:
Steel parts black oxidised.

Note:
The hub cover is supplied loose.
The crank handles can be secured to the shaft by cross-pinning or by parallel key together with a DIN 6912 socket head screw and DIN 7349 washer.
Two actions must be made to bring the safety grip into an operating position:
- Swing the grip out until it stops (90°).
- Push the grip in until it locks.

The pushed-in position is the most comfortable for cranking. The grip swings back automatically after releasing.

Drawings

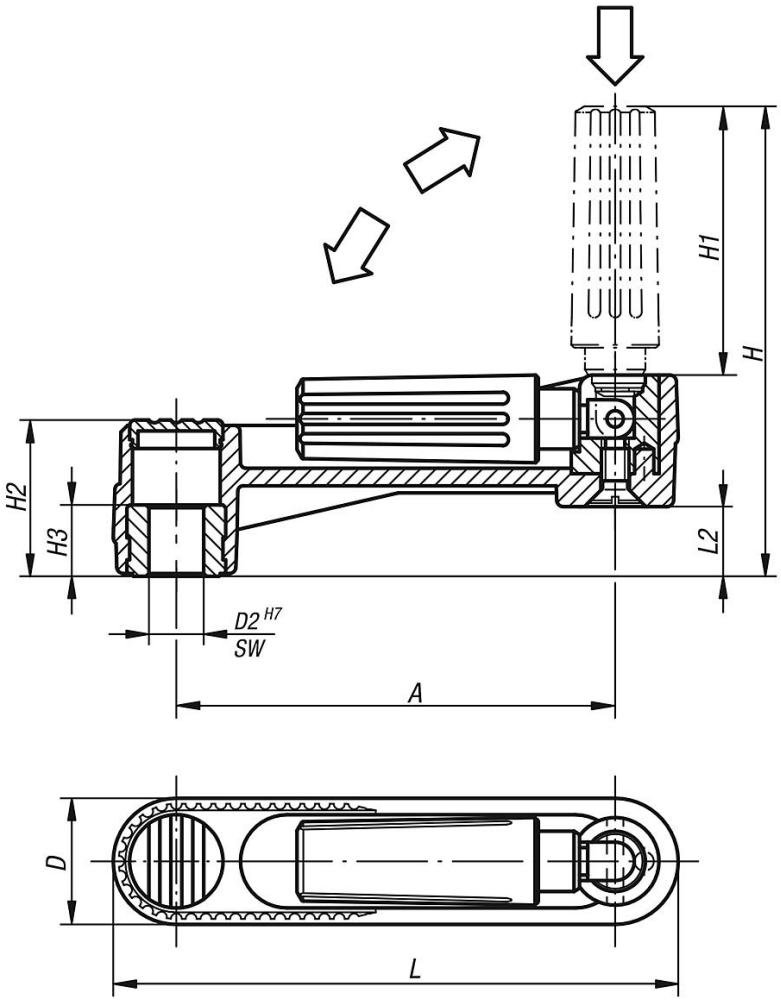

Crank handles with safety grip

Drawings

DIN 6885-1

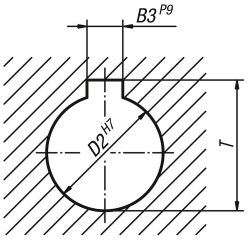

Overview of items

Crank handles with safety grip

Order No.	Version	A	D	D2	H	H1	H2	H3	L	L2
K0268.1108	reamed hole	80	24	8	84	47,5	29	13	104	13
K0268.1110	reamed hole	80	24	10	84	47,5	29	13	104	13
K0268.1210	reamed hole	100	29	10	104	58,5	36	13	129	16
K0268.1212	reamed hole	100	29	12	104	58,5	36	13	129	16
K0268.1312	reamed hole	125	36	12	138,5	82	44	18,5	161	19,5
K0268.1314	reamed hole	125	36	14	138,5	82	44	18,5	161	19,5

Order No.	Version	A	B3	D	D2	H	H1	H2	H3	L	L2	T
K0268.110802	reamed hole with slot	80	2	24	8	84	47,5	29	13	104	13	9
K0268.111003	reamed hole with slot	80	3	24	10	84	47,5	29	13	104	13	11,4
K0268.121003	reamed hole with slot	100	3	29	10	104	58,5	36	13	129	16	11,4
K0268.121204	reamed hole with slot	100	4	29	12	104	58,5	36	13	129	16	13,8
K0268.131204	reamed hole with slot	125	4	36	12	138,5	82	44	18,5	161	19,5	13,8
K0268.131405	reamed hole with slot	125	5	36	14	138,5	82	44	18,5	161	19,5	16,3

Order No.	Version	A	D	H	H1	H2	H3	L	L2	SW
K0268.2108	square socket	80	24	84	47,5	29	13	104	13	8
K0268.2110	square socket	80	24	84	47,5	29	13	104	13	10
K0268.2210	square socket	100	29	104	58,5	36	13	129	16	10
K0268.2212	square socket	100	29	104	58,5	36	13	129	16	12
K0268.2312	square socket	125	36	138,5	82	44	18,5	161	19,5	12
K0268.2314	square socket	125	36	138,5	82	44	18,5	161	19,5	14

© HEINRICH KIPP WERK KG