Tubular handles

Item description/product images

Description

Material:
Grip stainless steel 1.4301.
Legs die-cast aluminium.
End caps glass-bead reinforced plastic.
Screws and locking pins steel.

Version:
Grip finely ground.
Legs black powder-coated.
End cap black.
Screws and pins trivalent passivated.

Note:
Heavy duty tubular pull handles for machine and plant construction. Easy mounting from the front. Adjustable leg spacing by the same grip length.

© HEINRICH KIPP WERK KG

Tubular handles

Drawings

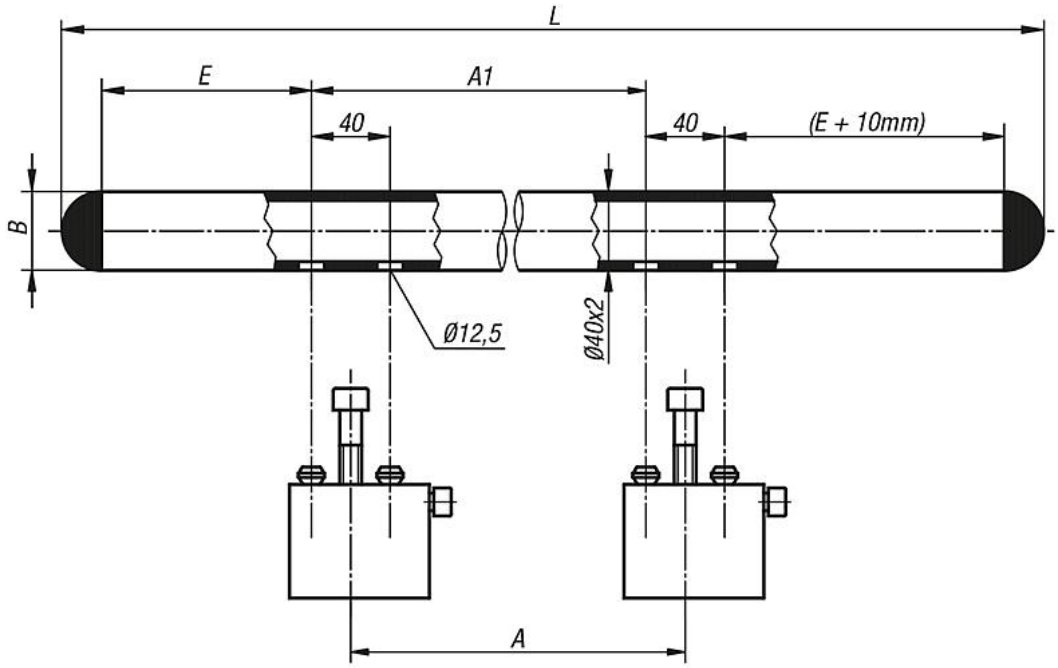

Leg locking diagram:

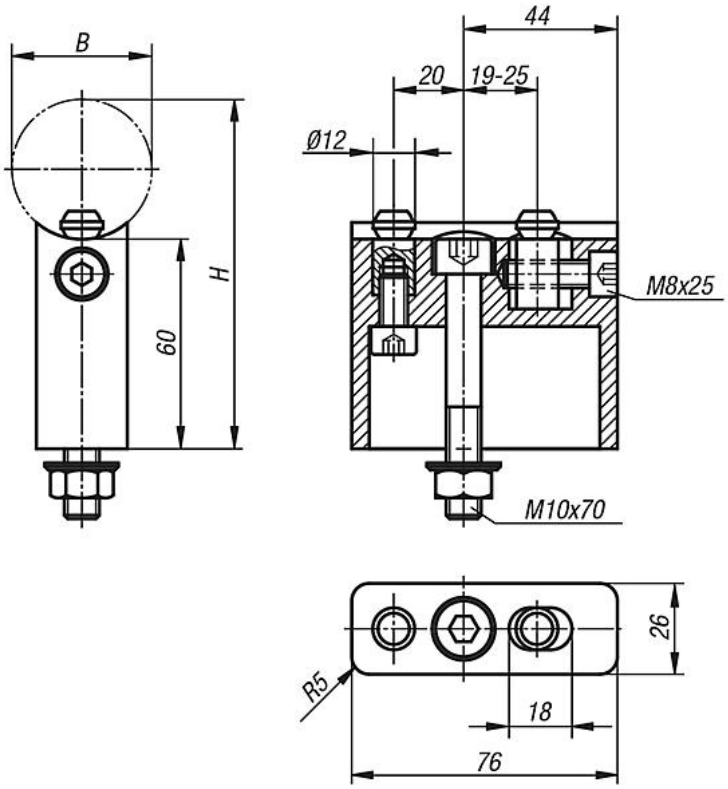

Overview of items

Tubular handles

Tubular handles

Overview of items

Order No.	A	A1	B	E	H	L	Load capacity N
K0225.0600101	380	380	40	85	100	640	1000
K0225.0700101	480	480	40	85	100	740	1000
K0225.0800101	500	500	40	125	100	840	1000
K0225.0900101	600	600	40	125	100	940	1000
K0225.1000101	700	700	40	125	100	1040	1000

© HEINRICH KIPP WERK KG